Description	Product Code	Weight (Lbs.)
Bases		
84" Ø x 18" Tall Basic	8418B	12,250
84" Ø x 18" Tall Custom	8418BSP	Varies
84" Ø x 24" Tall Basic	8424B	13,455
84" Ø x 24" Tall Custom	8424BSP	Varies
84" Ø x 36" Tall Basic	8436B	15,865
84" Ø x 36" Tall Custom	8436BSP	Varies
Risers		
84" Ø x 24" Tall Basic	8424R	4,790
84" Ø x 24" Tall Custom	8424RSP	Varies
84" Ø x 36" Tall Basic	8436R	7,200
84" Ø x 36" Tall Custom	8436RSP	Varies
84" Ø x 48" Tall Basic	8448R	9,615
84" Ø x 48" Tall Custom	8448RSP	Varies
Slab Top		
84" Ø/32" Ø x 12" Tall	84ST1232	4,805
Cast Iron		
32" Ø x 4.5" Tall Ring	32RC4	220
32" Ø Cover	32RC4	280

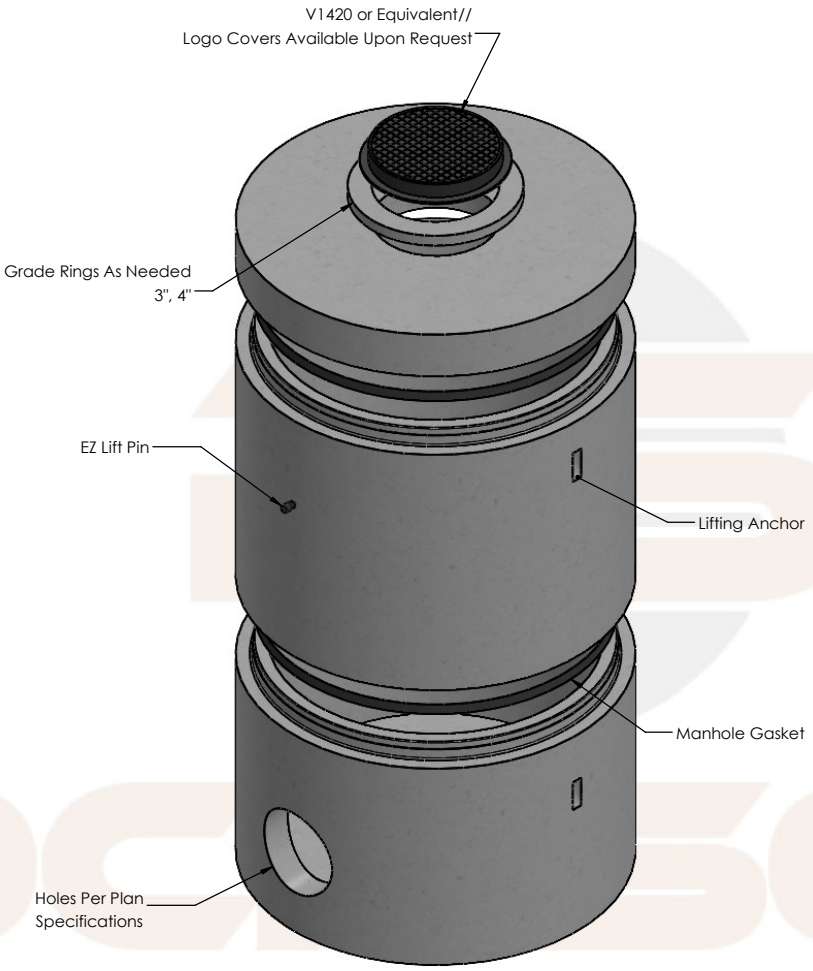

Exploded Isometric View
Scale: 1/4" = 1'

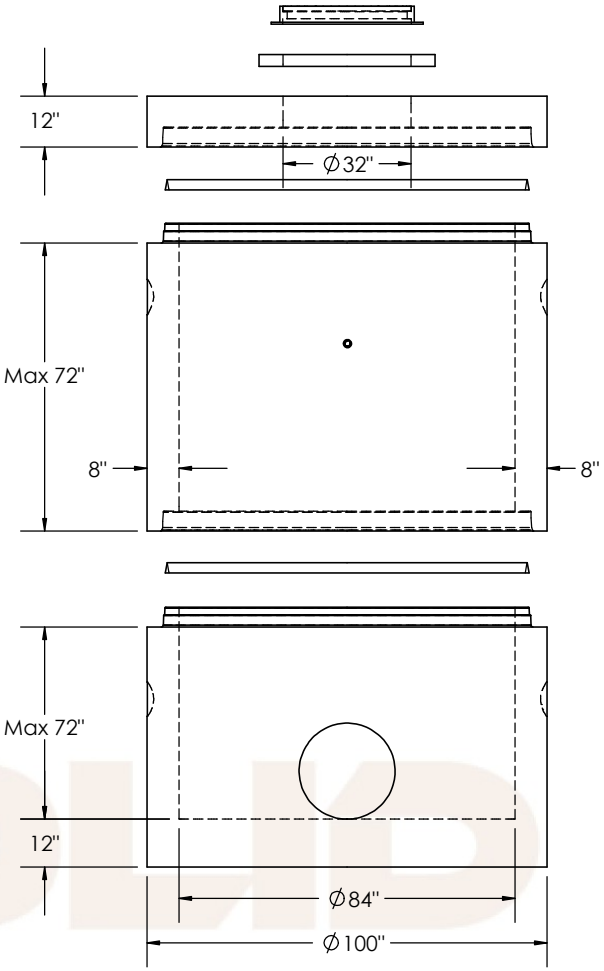

Side View
Scale: 1/4" = 1'

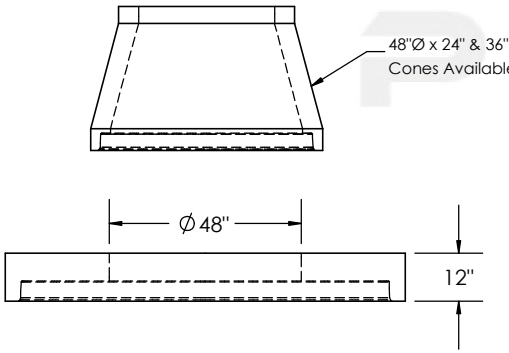

Transition Top (Optional)
Scale: 1/4" = 1'

Concrete
28 day compressive strength of 4,500 PSI
Bottoms to be monolithic at floor and at first stage of wall

Cement
Per ASTM C150: Type I/II

Loading
Designed to H-20 loading standard

Design
Per ASTM C478

Cast Iron
Meets ASTM A48 and CL35B Standards

Reinforcement
Rebar per ASTM A615 Grade 60
Wire Mesh per ASTM A1064

PROPRIETARY AND CONFIDENTIAL
THE INFORMATION CONTAINED IN THIS DRAWING IS THE SOLE PROPERTY OF ROCK SOLID PRECAST, LP. ANY REPRODUCTION IN PART OR AS A WHOLE WITHOUT THE WRITTEN PERMISSION OF ROCK SOLID PRECAST, LP IS PROHIBITED.

Rock Solid Precast, L.P.

11393 Sleepy Hollow Road
Conroe, TX 77385

PO Box 8066
The Woodlands, TX 77387

(281) 364-7474

TITLE

84" Ø Typical Storm Manhole

DWG. NO.
84STMMH Submittal Drawing

DRAWN | CHECKED | WEIGHT
Varies